User report

Automotive industries

Clinching

Designation	Clinching frame
Type	DFB-850
Ident no.	00000087110
Manufactured	05/2012
Order no.	584883
Number	6 pieces and 2 pieces
Other	

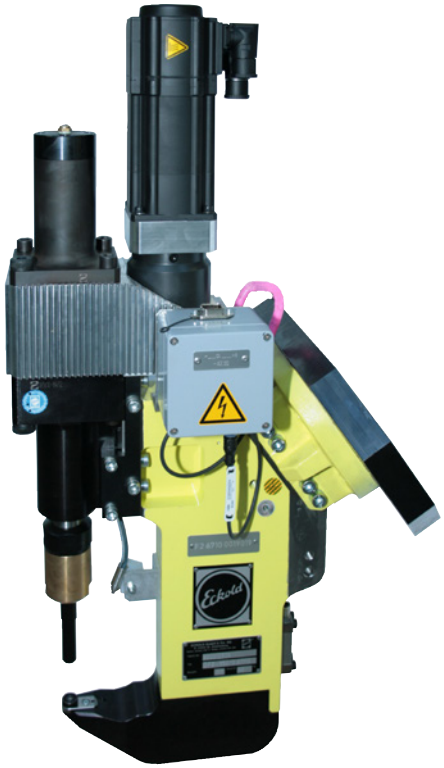

Task:

Joining front fender left and right hand side consisting of 3 parts each of various material sheet thicknesses that should be joint without using adhesive. One difficulty is the restricted component accessibility to the fender support.

Solution:

The front fenders are manufactured without adhesive but with a clinching frame having an extremely narrow frame horn. In addition a die with a low construction height is used.
Only in this way the component accessibility is made possible for the joining tasks between fender sheet plate and support.
The components result in a sheet thickness mixture that is joint with one similar punch and die combination.
A total of 11 clinching points is placed on each fender. The clinching frames are part of the servo motor-driven clinching system and they are designed for stationary as well as for mobile use on a robot.

Customer rating:

- always on-time deliveries
- unproblematic launch and use
- easy handling of user interface
- structured software
- good training material and structured qualification
- positively rated supplier

DFB-850

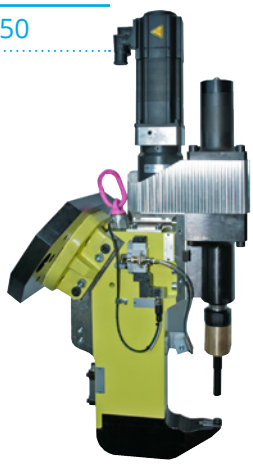

Flat die R-DF

157/03.22/3/_/DEU/Ding • Technical modifications kept under reserve

Name	Clinching frame
Type	DFB-850
Ident no.	00000087110
Drive	servo motor-driven
Pressure force	max. 80 kN
Stroke length	50 mm
Pneumatic pressure	min. / max. 5 / 6 bar
Weight	90 kg

Opening width	[A]	[mm]	48
Throat depth, horizontal	[B]	[mm]	100
	[C]	[mm]	99
Tool holder protrusion at frame end	[D]	[mm]	6,8
Tool holder protrusion, ram side	[E]	[mm]	84,5
Frame end height	[J]	[mm]	73,5
C-frame width	[K]	[mm]	56
Width	[X]	[mm]	380
Length	[Y]	[mm]	429
Height	[Z]	[mm]	855,5

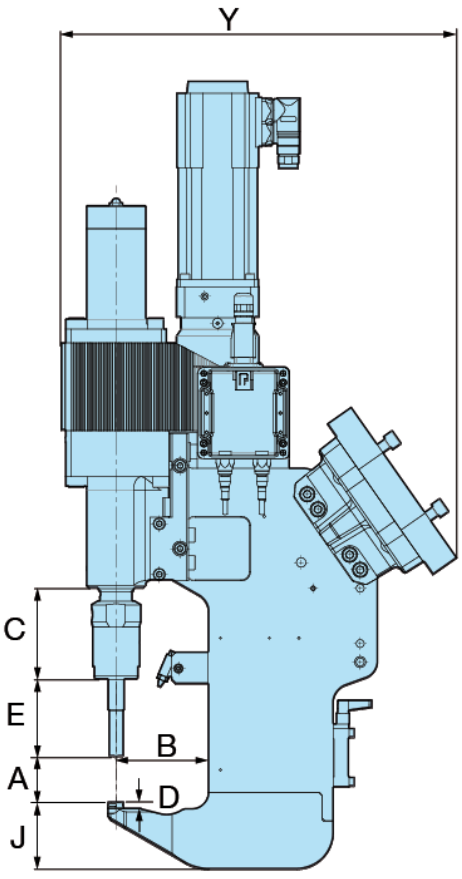

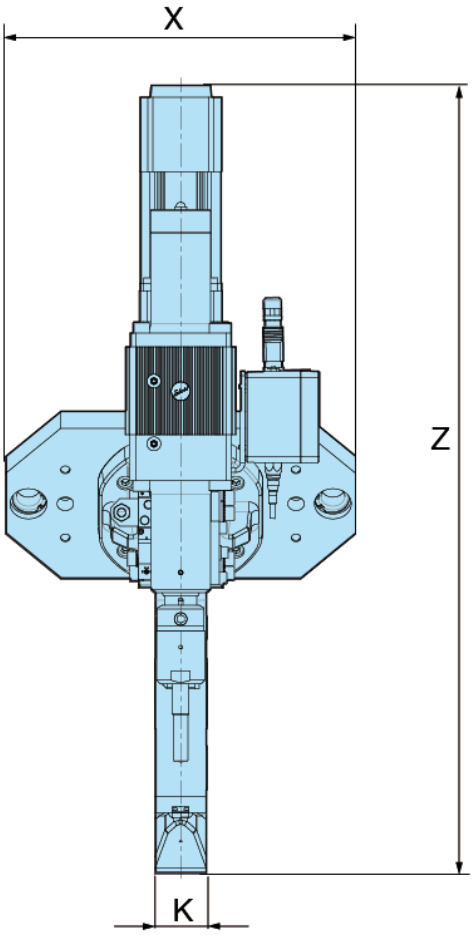

157/03.22/3/_/DEU/Ding • Technical modifications kept under reserve

Joining task		1	2	
Clinching variant		R-DF 8	R-DF 8	
Component	t_1	Wing	Connecting web	
Material	t_1	Al	Al	
Punch side layer thickness	t_1	1,0 mm	1,0 mm	
Intermediate layer		none	none	
Component	t_2	Brace	Wing	
Material	t_2	Al	Al	
Die side layer thickness	t_2	1,5 mm	1,0 mm	
No. of clinching points		10	1	11

Wing, front

1 Wing
2 Brace
3 Connecting web

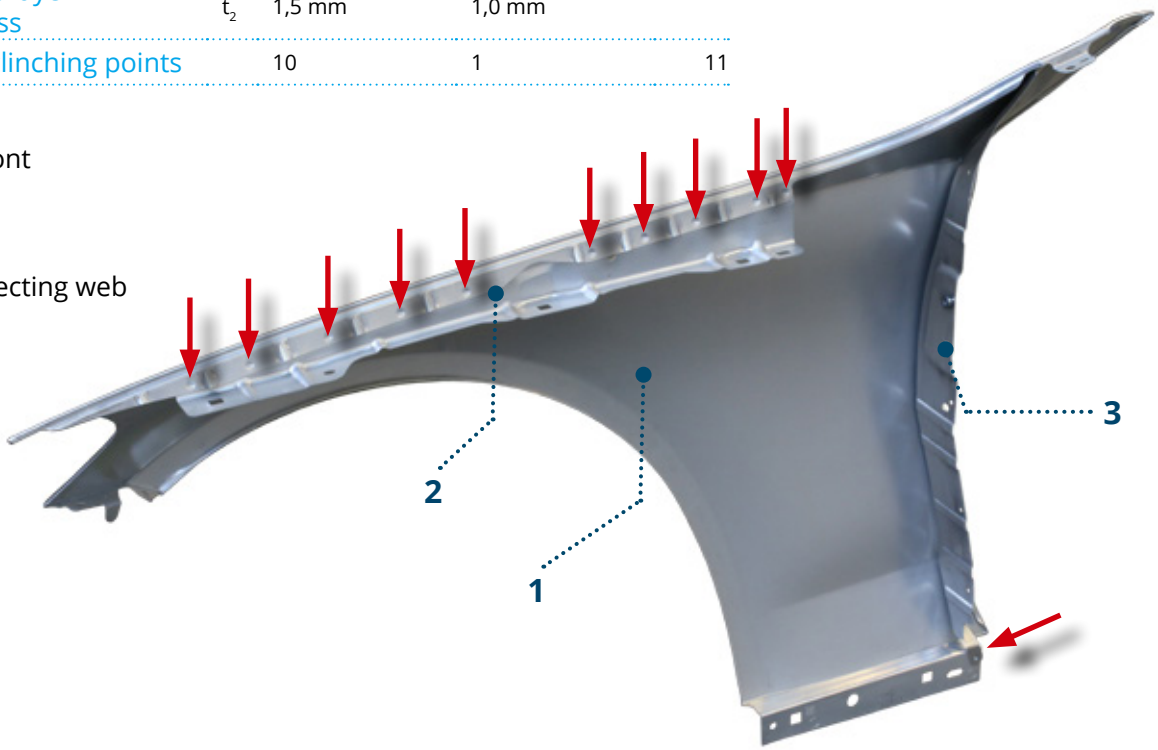

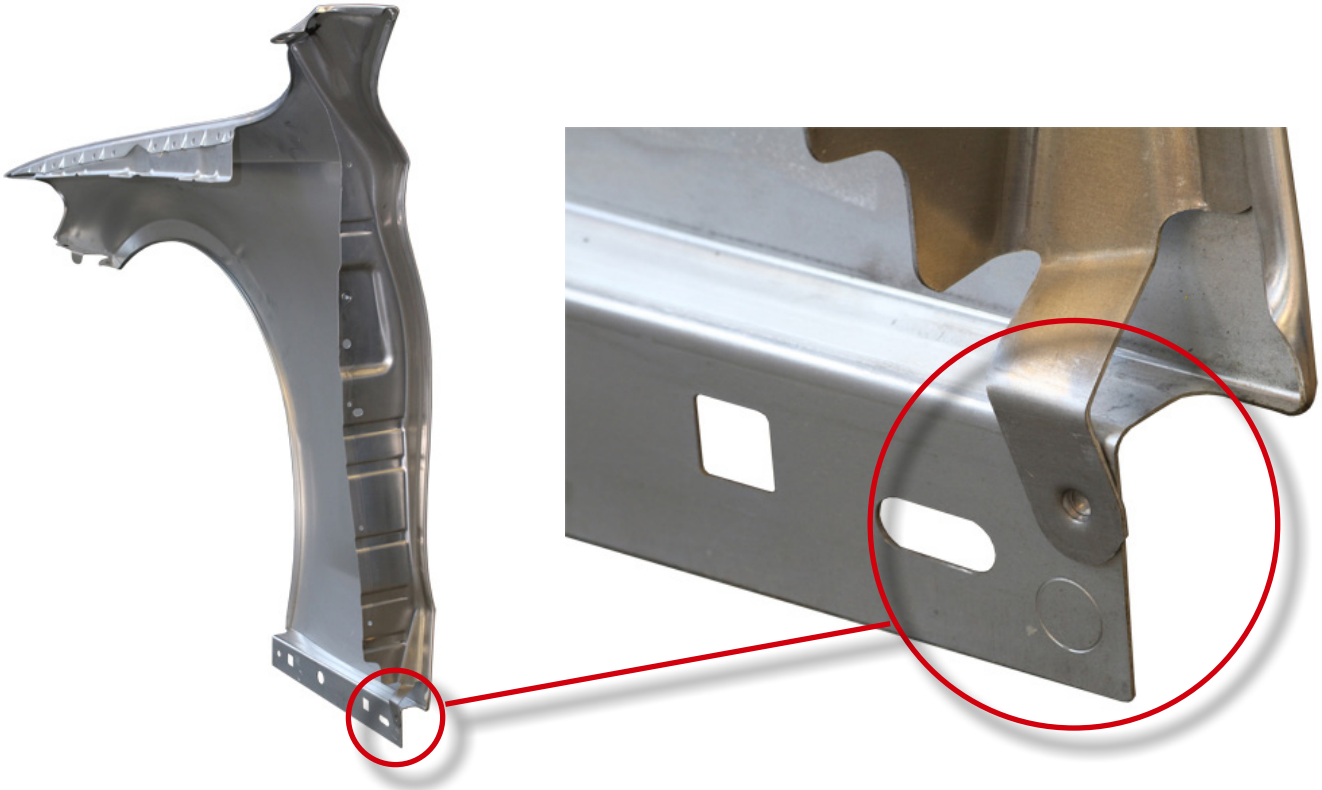

157/03.22/3/_/DEU/Ding • Technical modifications kept under reserve

Servo motor-driven clinching system:

Overview and Setup:

1 **Clinching frame** for robot integration with servo motor drive and clinching tools (punch and die)

2 **Micro spray system** (optional accessory)

3 **Control cabinet** with servo regulator for drive unit and integrated process monitoring system, Visualisation software

4 **Cable set** for connection between control cabinet and clinching frame (in stationary design) and between control cabinet and robot base (when handling by robot)

Optional accessories:

- Micro spray system
- Floating mounting at clinching frame

(The illustrated components serve only as example and may differ in design and dimension.)

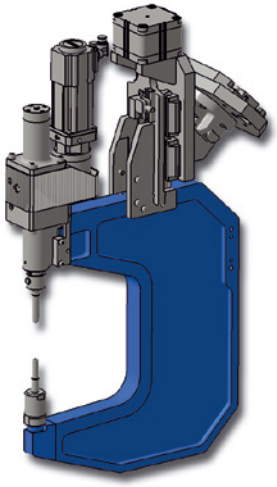

1

2

3

4

157/03.22/3/_/DEU/Ding • Technical modifications kept under reserve

ECKOLD GmbH & Co. KG

Trading successful for over 80 years

Since our company was established in 1936 by Walter Eckold, the only aspect of our business not to change from that year to this has been our commitment to our customers. Our priority remains to provide our customers with economical and environmentally viable cutting edge technological solutions to their ever changing manufacturing processes.
During our 80 years of trading we have amassed a knowledgeable highly skilled engineering workforce in our specialist areas of shaping and joining sheet metal. These specialist skills enable us to quote from one off standard pieces of equipment to fully tailor-made automated robotic systems. A full range of all our specialist techniques can be found in all sheet metal, craft and industry work-places. Join with us, the successful sheet metal experts, to shape your future metalworking solutions.

Service from A to Z

- Test runs and analyses for customers
- Production of sample sheets / workpieces
- Feasibility studies for tool dimensioning
- Process planning and implementation of technical solutions
- Production at own factory
- Commissioning at customer premises
- Routine maintenance service
- Customer support for process optimisation
- – Assistance in teach-in process for robot positions
- – Production of microsections / assessment of clinching point quality
- – Online support
- Continuous assistance from commissioning to SOP
- Training of operators / maintenance technicians / machine experts

Facts & figures

- Founded 1936
- Products in operation in more than 100 countries
- More than 25 sales partners worldwide
- Sales offices in Great Britain, Hungary, USA, Switzerland, Japan and the Czech Republic
- Certified according to ISO 9001:2015

Eckold GmbH & Co. KG
Walter-Eckold-Str. 1
37444 St. Andreasberg
Germany
Tel.: +49 5582 802 0
Fax: +49 5582 802 300
www.eckold.de
info@eckold.de

157/03.22/3/_/DEU/Ding • Technical modifications kept under reserve