User report

Automotive industries

Clinching

Designation	Clinching frame
Type	DFB-851
Ident no.	00000087582
Manufactured	07/2012
Order no.	584973
Number	4 pieces
Other	

DFB-851

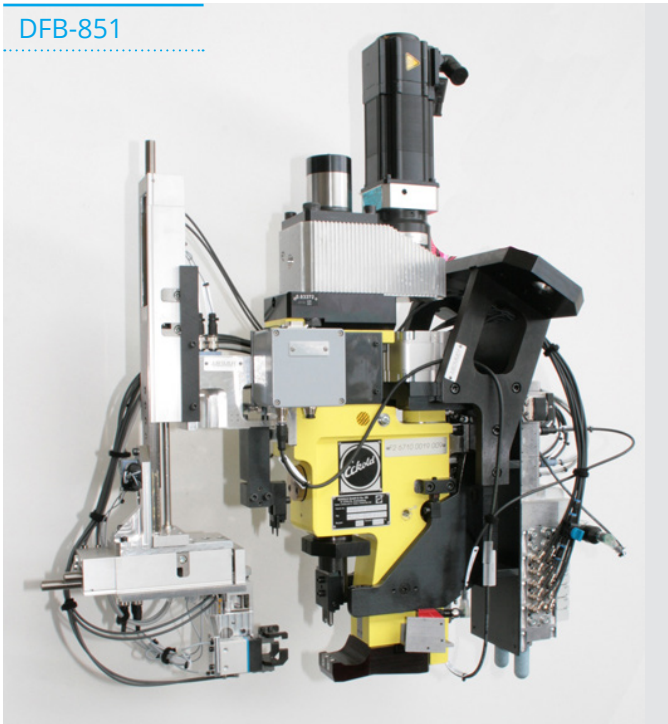

Task:

Sealing fastening on the A-column of the side panel. The sealing serves as connection between screen and exterior planking and has a water conducting function.

Solution:

On each A-column of the side panel clips are joint to fasten the sealing afterwards. A separate sorting unit enables the automated pick up and feeding of the clips.

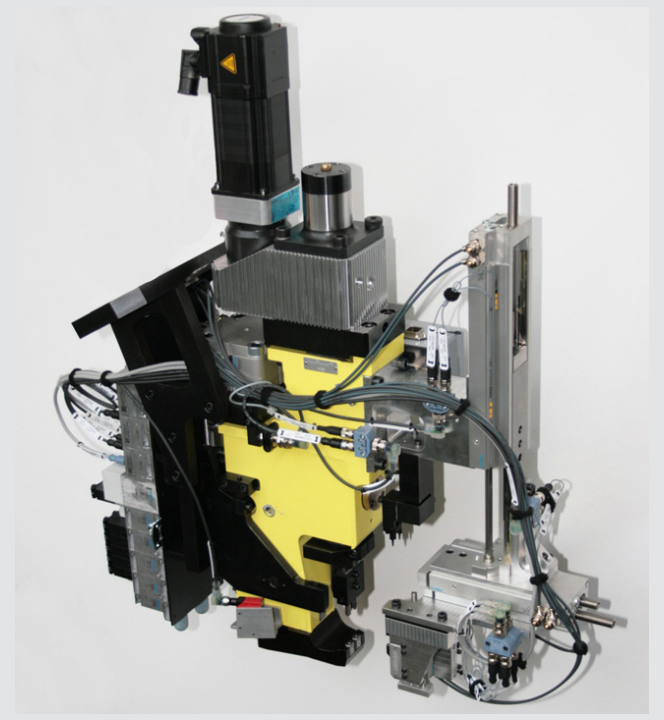

Customer rating:

- always on-time deliveries
- unproblematic launch and use
- easy handling of user interface
- structured software
- good training material and structured qualification
- positively rated supplier

157/03.22/3/_/DEU/Ding • Technical modifications kept under reserve

Name	Clinching frame (CONFIX)
Type	DFB-851
Ident no.	00000087582
Drive	servo motor-drive
Pressure force	max. 80 kN
Stroke length	50 mm
Pneumatic pressure	min. / max. 5 / 6 bar
Weight	160 kg

Opening width	[A]	[mm]	47
Throat depth, horizontal	[B]	[mm]	50
	[C]	[mm]	--
Tool holder protrusion at frame end	[D]	[mm]	--
Tool holder protrusion, ram side	[E]	[mm]	80
Frame end height	[J]	[mm]	32
C-frame width	[K]	[mm]	68
Width	[X]	[mm]	380
Length	[Y]	[mm]	829
Height	[Z]	[mm]	960

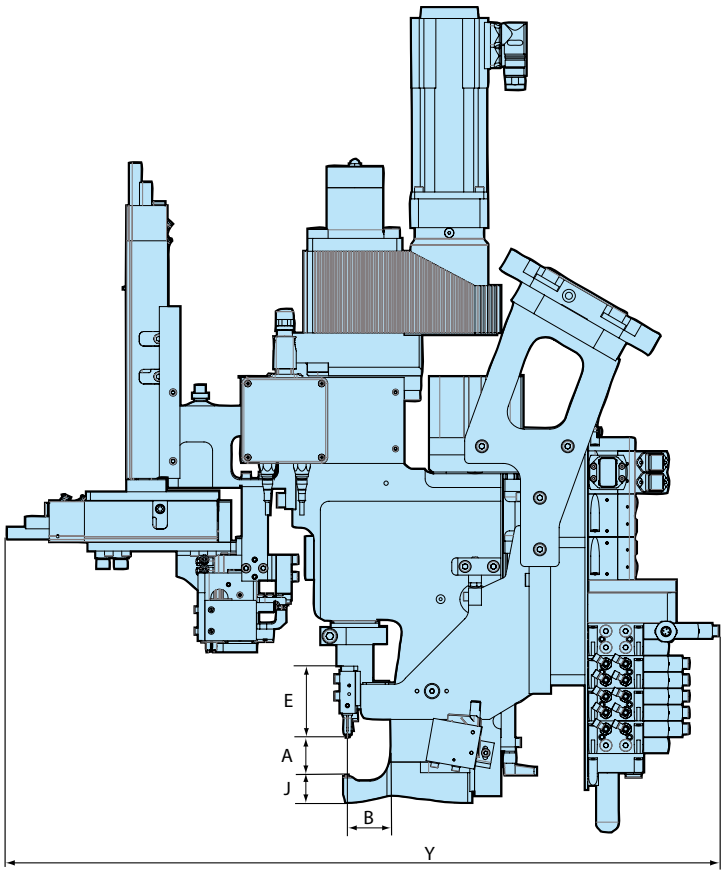

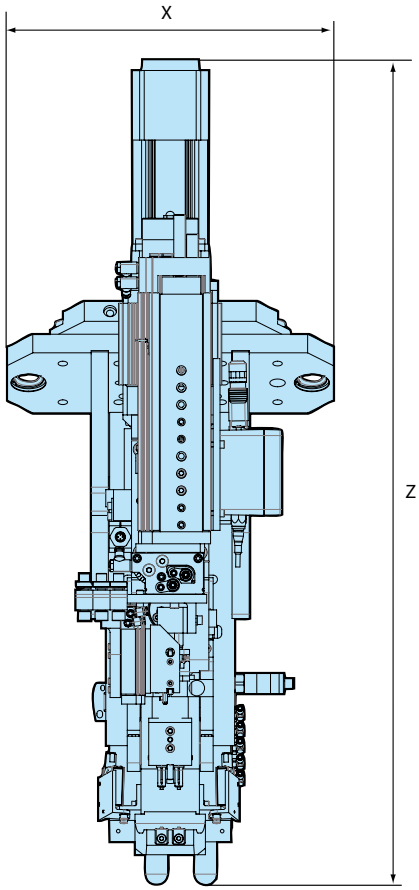

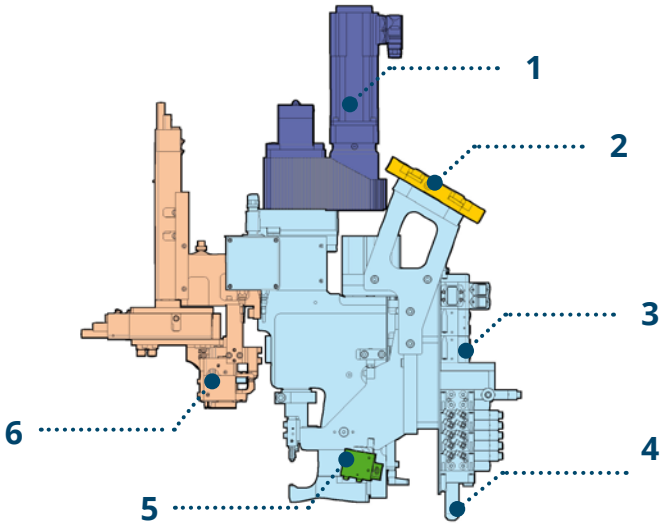

1 Servo motor drive unit
2 Clamp and shelf for robot coupling
3 Electric equipment
4 Pneumatic equipment
5 Reflex sensor
6 Feed unit

157/03.22/3/_/DEU/Ding • Technical modifications kept under reserve

Joining task		1
Clinching variant		CONFIX
Component	t_1	Side wall / A-column
Material	t_1	Steel
Punch side layer thickness	t_1	0,7 mm
Intermediate layer		non
Component	t_2	Clip
Material	t_2	Pre bore
Die side layer thickness	t_2	0,63 mm
Number CONFIX points		2 each Clip
Number clips each side		4 piece

Remark:

Before using the confix joining technology the clips were fastened by rivets. This often resulted in corrodibility. In addition, the confix joining is considerably cost-saving compared to rivetting.

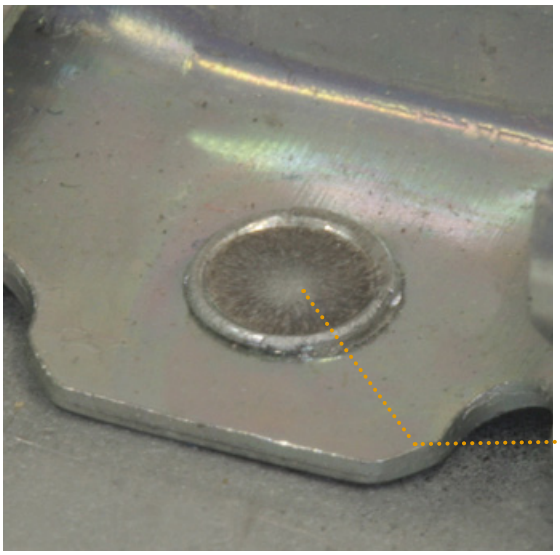

Clip not joined

Clip joined

Sealing on windscreen / A-column (side panel)

1 Clip
2 Sealing

Sealing on a-column

157/03.22/3/_/DEU/Ding • Technical modifications kept under reserve

Servo motor-driven clinching system:

Overview and Setup:

1 **Clinching frame** for robot integration with servo motor drive and clinching tools (punch and die)

2 **Control cabinet** with servo regulator for drive unit and integrated process monitoring system, Visualisation software

3 **Cable set** for connection between control cabinet and clinching frame (in stationary design) and between control cabinet and robot base (when handling by robot)

Optional accessories:

- Floating mounting at clinching frame

(The illustrated components serve only as example and may differ in design and dimension.)

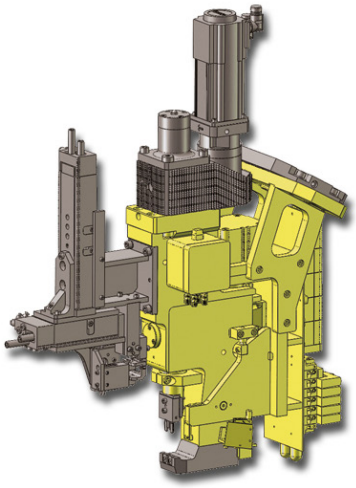

1

2

3

157/03.22/3/_/DEU/Ding • Technical modifications kept under reserve

ECKOLD GmbH & Co. KG

Trading successful for over 80 years

Since our company was established in 1936 by Walter Eckold, the only aspect of our business not to change from that year to this has been our commitment to our customers. Our priority remains to provide our customers with economical and environmentally viable cutting edge technological solutions to their ever changing manufacturing processes.
During our 80 years of trading we have amassed a knowledgeable highly skilled engineering workforce in our specialist areas of shaping and joining sheet metal. These specialist skills enable us to quote from one off standard pieces of equipment to fully tailor-made automated robotic systems. A full range of all our specialist techniques can be found in all sheet metal, craft and industry work-places. Join with us, the successful sheet metal experts, to shape your future metalworking solutions.

Service from A to Z

- Test runs and analyses for customers
- Production of sample sheets / workpieces
- Feasibility studies for tool dimensioning
- Process planning and implementation of technical solutions
- Production at own factory
- Commissioning at customer premises
- Routine maintenance service
- Customer support for process optimisation
- – Assistance in teach-in process for robot positions
- – Production of microsections / assessment of clinching point quality
- – Online support
- Continuous assistance from commissioning to SOP
- Training of operators / maintenance technicians / machine experts

Facts & figures

- Founded 1936
- Products in operation in more than 100 countries
- More than 25 sales partners worldwide
- Sales offices in Great Britain, Hungary, USA, Switzerland, Japan and the Czech Republic
- Certified according to ISO 9001:2015

Eckold GmbH & Co. KG
Walter-Eckold-Str. 1
37444 St. Andreasberg
Germany
Tel.: +49 5582 802 0
Fax: +49 5582 802 300
www.eckold.de
info@eckold.de

157/03.22/3/_/DEU/Ding • Technical modifications kept under reserve